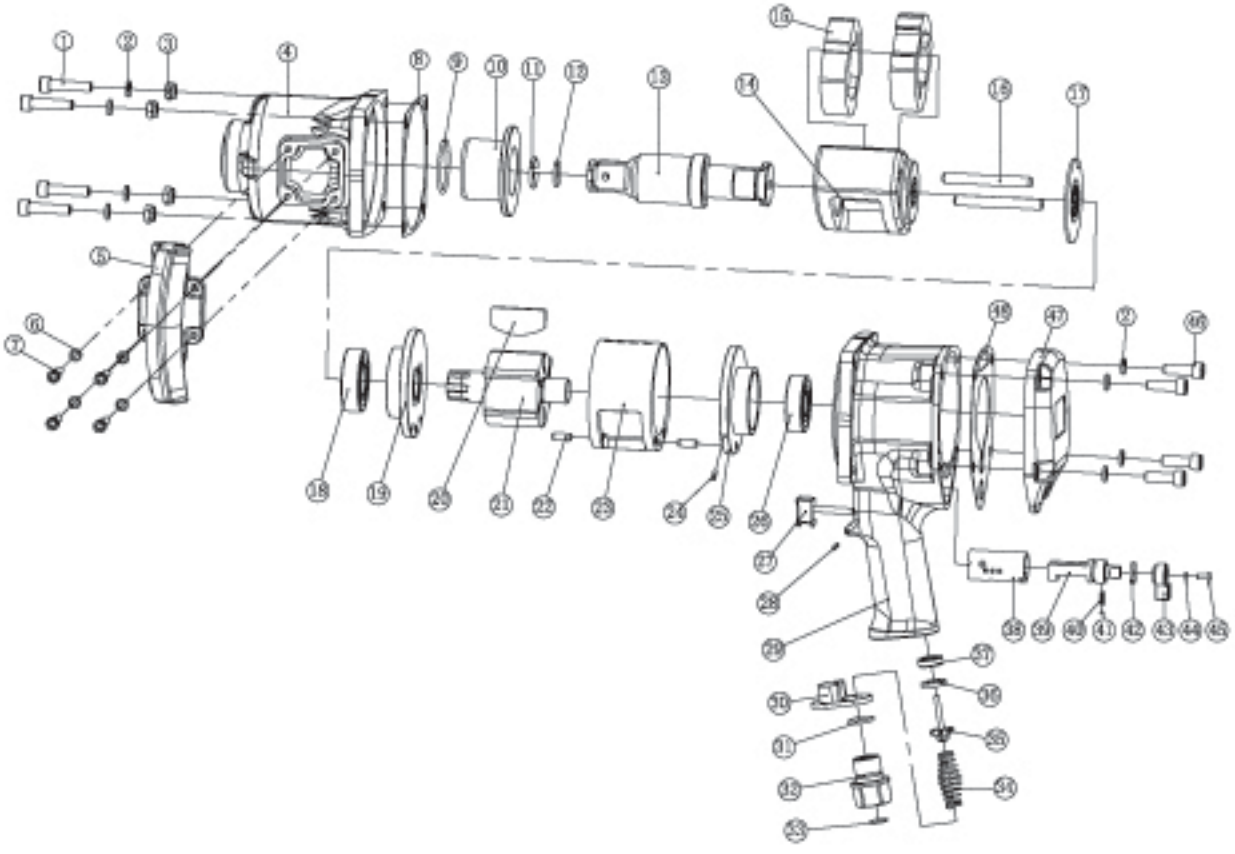

No.	Name	Q'ty	No.	Name	Q'ty
1	hex screw	4	25	rear end plate	1
2	gasket	8	26	bearing	1
3	nut	4	27	trigger	1
4	hammer case	1	28	pin	1
5	handle	1	29	handle	1
6	gasket	4	30	plastic cover	1
7	hex screw	4	31	O ring	1
8	gasket	1	32	air inlet	1
9	O ring	1	33	air inlet screen	1
10	anvil bushing	1	34	inlet spring	1
11	circlip	1	35	inlet valve	1
12	O ring	1	36	rubber gasket	1
13	anvil	1	37	inlet gasket	1
14	hammer cage	1	38	timing bushing	1
15	hammer	2	39	timing valve	1
16	hammer pin	2	40	spring	1
17	gasket	1	41	steel ball	1
18	bearing	1	42	O ring	1
19	front end plate	1	43	timing button	1
20	vane	6	44	gasket	1
21	rotor	1	45	screw	1
22	pin	2	46	hex screw	4
23	cylinder	1	47	back cover	1
24	pin	1	48	gasket	1